Cylinder Head

Special Tool(s)

 ST2806-A	Alignment Pins, Cylinder Head 303-1040 (SR-015486)
 ST2804-A	Compressor, Valve Spring 303-1039
 ST2197-A	Installer, Crankshaft Front Oil Seal 303-635
 ST2428-A	Installer, Crankshaft Vibration Damper 303-102 (T74P-6316-B)
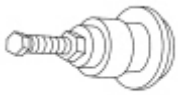 ST1328-A	Installer, Front Cover Oil Seal 303-335 (T88T-6701-A)
 ST1377-A	Lifting Bracket, Engine 303-F047 (014-00073) or equivalent
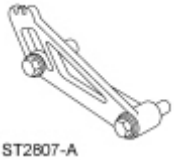 ST2807-A	Locking Tool, Camshaft Phaser 303-1046
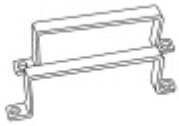 ST1668-A	Remover/Installer, Cylinder Head 303-572 (T97T-6000-A)

General Equipment

Hydraulic Chain Tensioner Retaining Clip 1L3Z-6P250-AA

Material

Item	Specification
Motorcraft® Metal Surface Prep ZC-31-A	—
Motorcraft® Premium Gold Engine Coolant with Bittering Agent (US); Motorcraft® Premium Gold Engine Coolant (Canada) VC-7-B (US); CVC-7-A (Canada); or equivalent (yellow color)	WSS-M97B51-A1
Motorcraft® SAE 5W-20 Premium Synthetic Blend Motor Oil XO-5W20-QSP (US); Motorcraft® SAE 5W-20 Super Premium Motor Oil CXO-5W20-LSP12 (Canada); or equivalent	WSS-M2C930-A
Silicone Gasket and Sealant TA-30	WSE-M4G323-A4
Silicone Gasket Remover ZC-30	—

All cylinder heads

1. ***NOTICE:*** **Make sure all coolant residue and foreign material are cleaned from the block surface and cylinder bore. Failure to follow these instructions may result in engine damage.**

   NOTICE: **The use of sealing aids (aviation cement, copper spray and glue) is not permitted. The gasket must be installed dry. Failure to follow these instructions may result in future oil leakage.**

   NOTICE: **The cylinder head bolts must be discarded and new bolts installed. They are tighten-to-yield designed and cannot be reused.**

   NOTE: Do not turn the crankshaft until instructed to do so.

   NOTE: LH shown, RH similar.

   Using the Cylinder Head Alignment Pins, position the cylinder head gaskets and cylinder heads over the dowels and install the cylinder head bolts loosely.

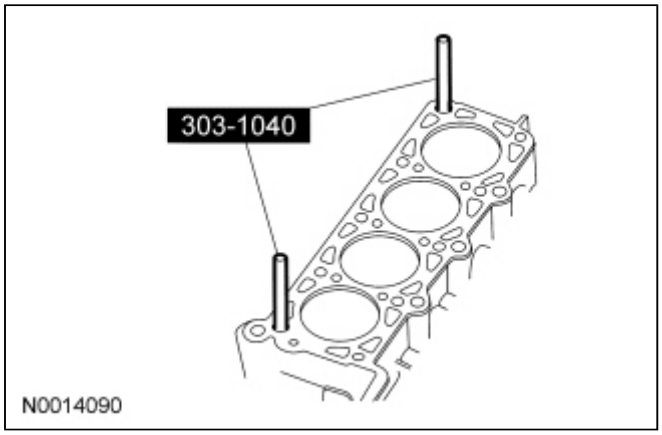

2. **NOTE:** RH shown, LH similar.

Tighten the bolts in 3 stages, in the sequence shown.

- Stage 1: Tighten to 40 Nm (30 lb-ft).
- Stage 2: Tighten an additional 90 degrees.
- Stage 3: Tighten an additional 90 degrees.

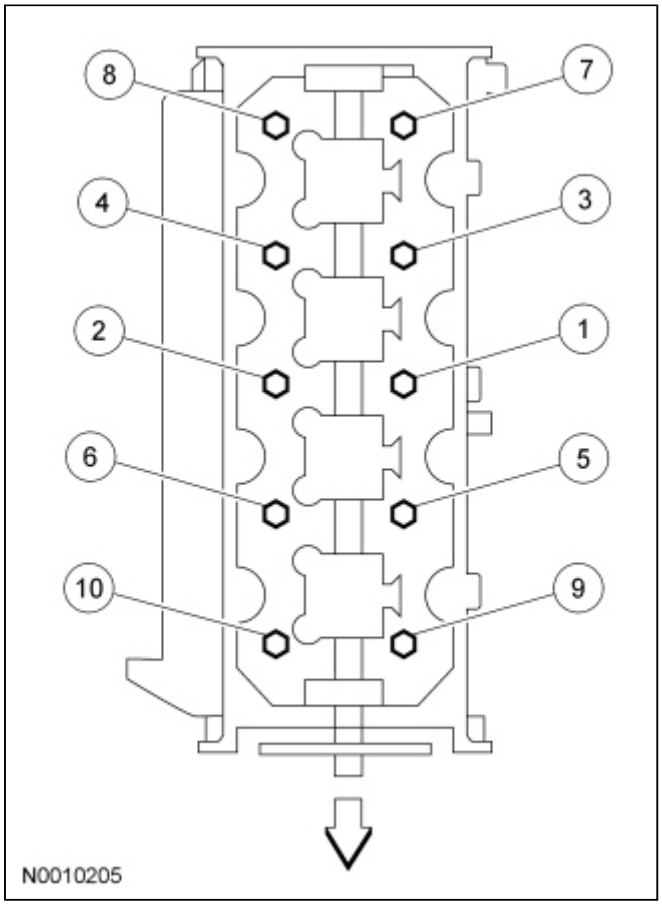

LH cylinder head

3. Remove the Cylinder Head Remover/Installer from the LH cylinder head.

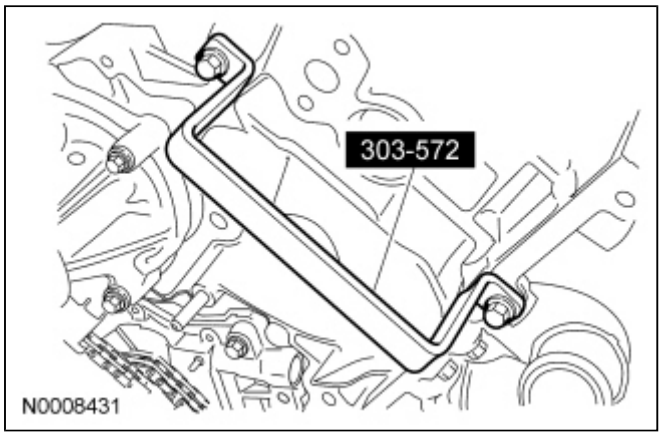

4. **NOTE:** Lubricate the hydraulic lash adjusters with clean engine oil prior to installation.

   NOTE: The hydraulic lash adjusters must be installed in their original locations.

   Install the hydraulic lash adjusters into the LH cylinder head.

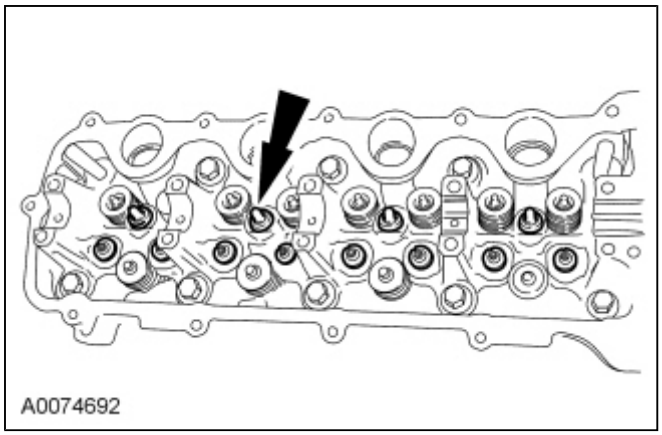

5. Install 8 new LH exhaust manifold studs.
    - Tighten to 12 Nm (106 lb-in).

6. Position a new gasket, the LH exhaust manifold and tighten the 8 new nuts in the sequence shown.
    - Tighten to 25 Nm (18 lb-ft).

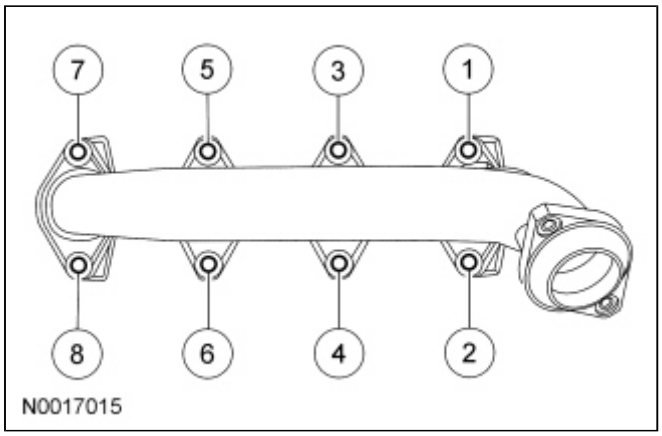

7. Install the ground strap and nut to the stud bolt.
    - Tighten to 10 Nm (89 lb-in).

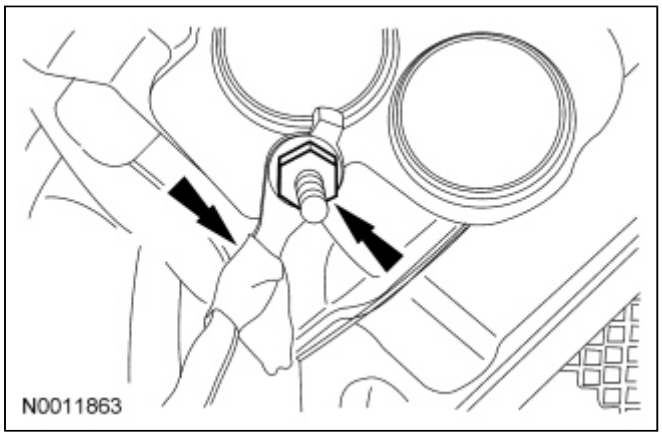

RH cylinder head

8. Remove the Cylinder Head Remover/Installer from the RH cylinder head.

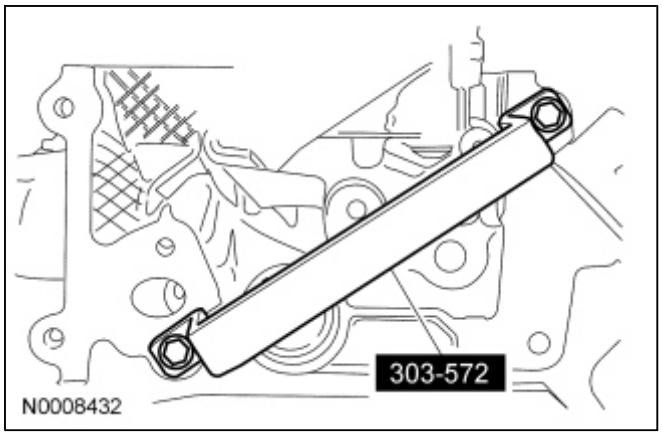

9. **NOTE:** Lubricate the hydraulic lash adjusters with clean engine oil prior to installation.

   NOTE: The hydraulic lash adjusters must be installed in their original locations.

   Install the hydraulic lash adjusters into the RH cylinder head.

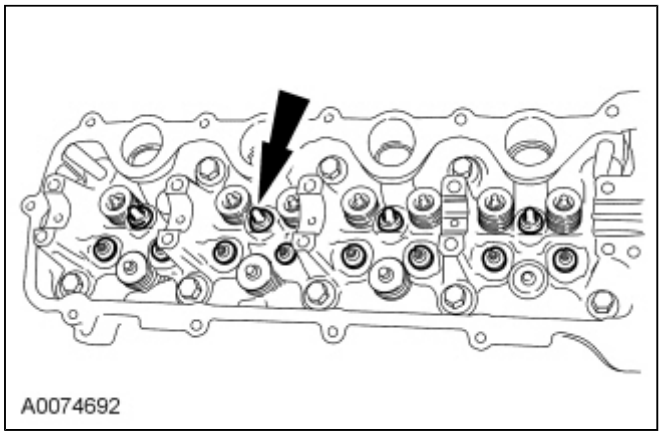

10. Install 8 new RH exhaust manifold studs.
    - Tighten to 12 Nm (106 lb-in).

11. Position a new gasket, the RH exhaust manifold and tighten the 8 new nuts in the sequence shown.
    - Tighten to 25 Nm (18 lb-ft).

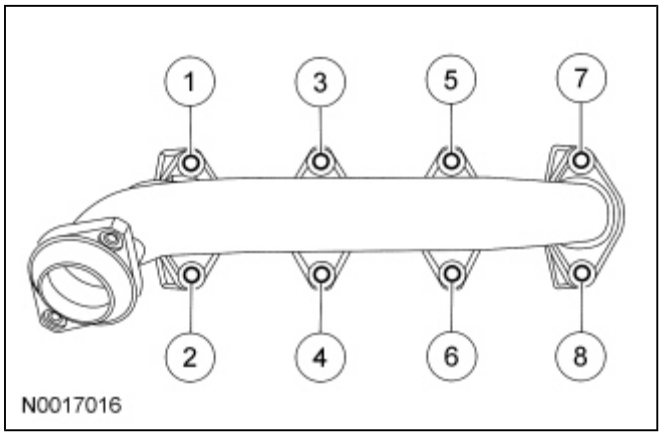

12. **NOTE:** Do not reuse the O-ring seals.

    NOTE: Lubricate the O-ring seals with clean engine coolant prior to installation.

    Slide the coolant tube forward with the new O-ring seals into the cylinder block.

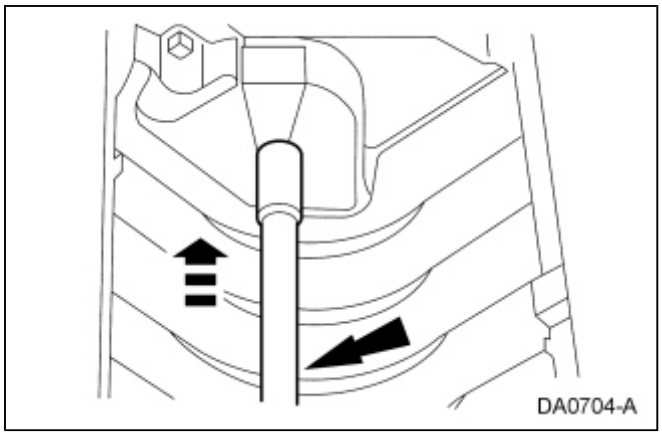

13. Install the coolant tube stud bolt.
    - Tighten to 10 Nm (89 lb-in).

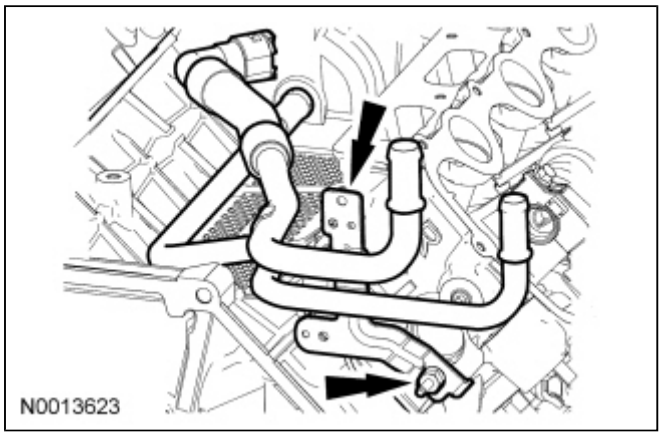

All cylinder heads

14. **NOTE:** Lubricate the camshaft and camshaft journals with clean engine oil prior to installation.

    Install the LH and RH camshafts.

15. **NOTE:** LH shown, RH similar.

    NOTE: Lubricate the camshaft bearing caps with clean engine oil.

    Install the LH and RH camshaft bearing caps in their original locations.
    - Position the front camshaft bearing cap.
    - Position the remaining camshaft bearing caps.
    - Install the bolts loosely.
    - Tighten to 10 Nm (89 lb-in) in the sequence shown.

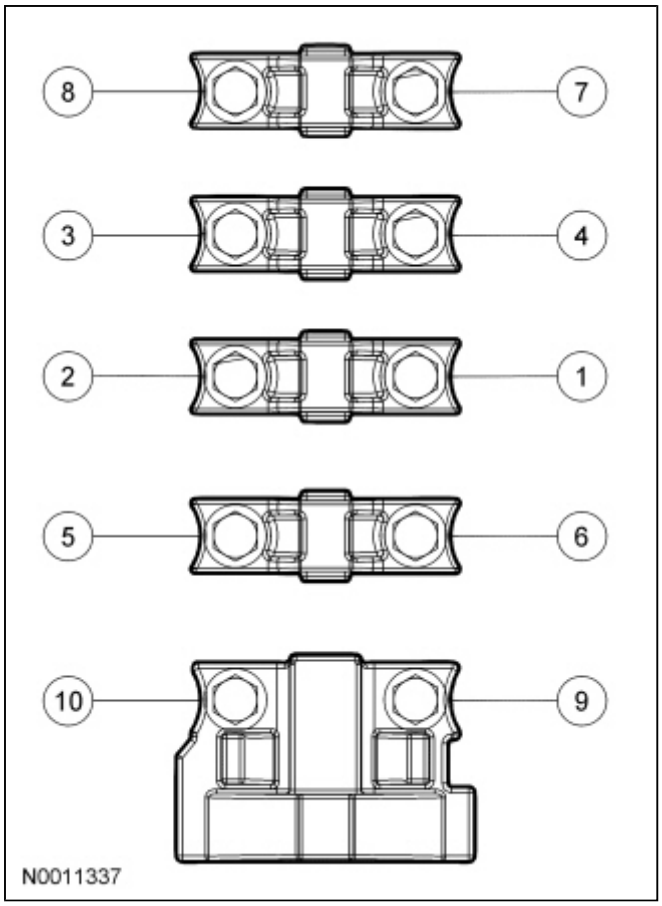

16. ***NOTICE:*** **Damage to the camshaft phaser sprocket assembly will occur if mishandled or used as a lifting or leveraging device.**

    NOTE: The RH and LH camshaft phaser sprockets are similar. Refer to the single timing mark to identify the RH camshaft phaser sprocket and the L timing mark to identify the LH camshaft phaser sprocket.

    NOTE: LH shown, RH similar.

    Install the camshaft phaser sprockets and new camshaft phaser bolts finger tight.

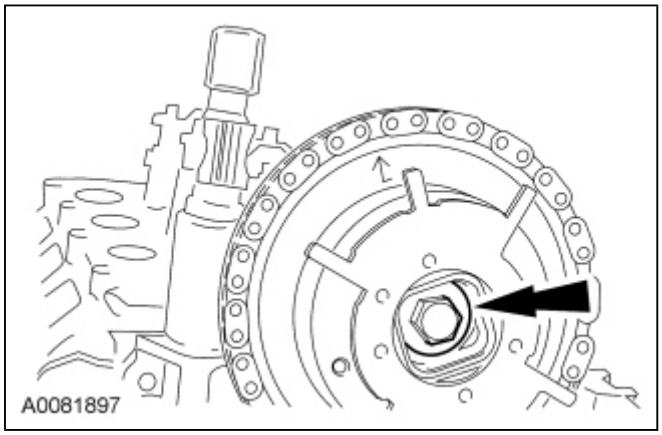

17. ***NOTICE:*** **Damage to the camshaft phaser sprocket assembly will occur if mishandled or used as a lifting or leveraging device.**

    NOTICE: **Only use hand tools to remove the camshaft phaser sprocket assembly or damage may occur to the camshaft or camshaft phaser unit.**

    NOTE: LH shown, RH similar.

    Using the Camshaft Phaser Locking Tool, tighten the LH and RH camshaft phaser sprocket bolts in 2

stages.

- Stage 1: Tighten to 40 Nm (30 lb-ft).
- Stage 2: Tighten an additional 90 degrees.

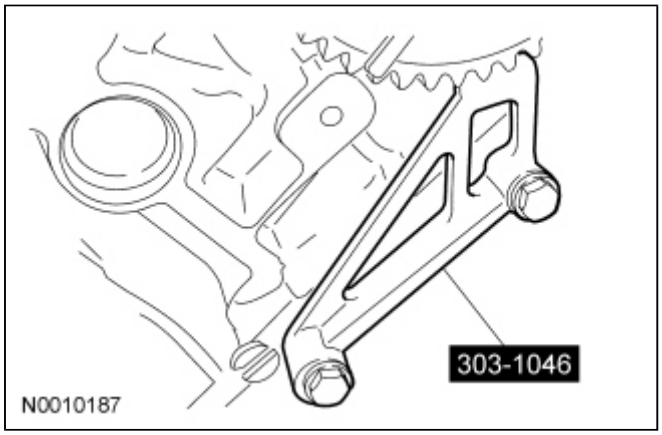

18. Install the crankshaft sprocket, making sure the flange faces forward.

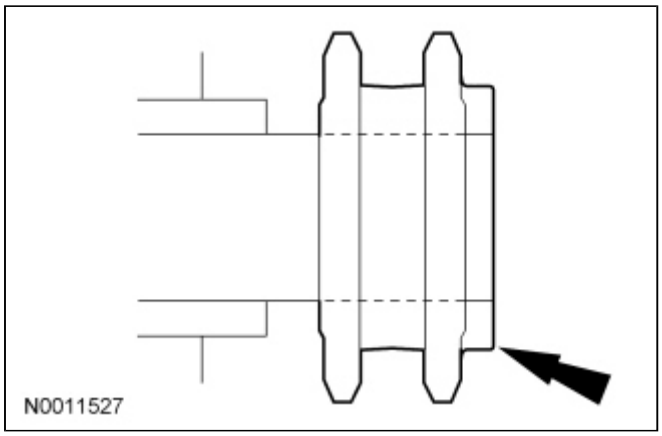

19. Rotate the crankshaft to position the crankshaft sprocket timing mark in the 6 o'clock position.

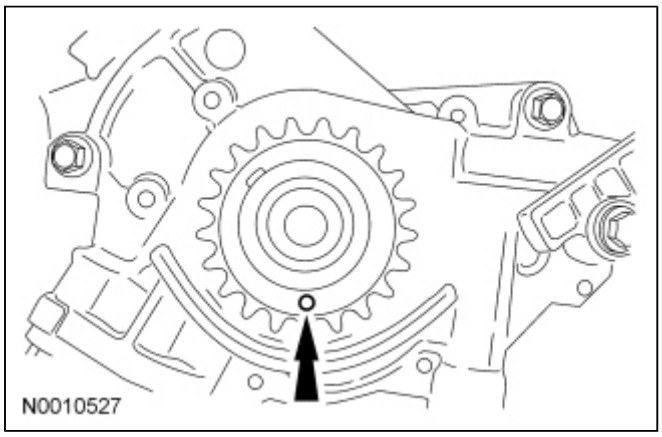

20. Rotate the camshaft sprockets to position the RH camshaft sprocket timing mark in the 11 o'clock position and the LH camshaft sprocket timing mark in the 12 o'clock position.

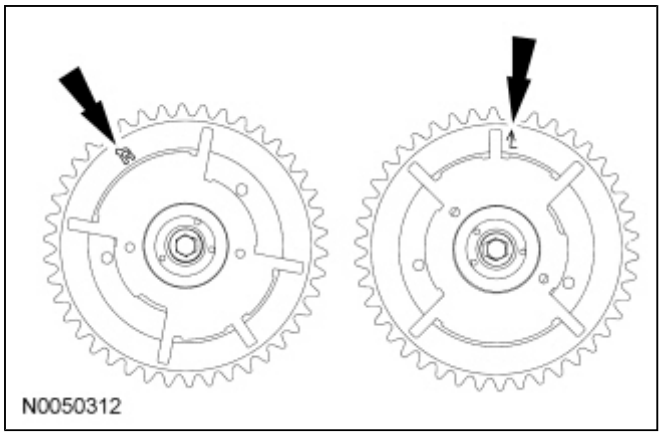

21. ***NOTICE:*** **If one or both of the tensioner mounting bolts are loosened or removed, the tensioner-sealing bead must be inspected for seal integrity. If cracks, tears, separation from the tensioner body or permanent compression of the seal bead is observed, install a new tensioner or engine damage may occur.**

    Inspect the RH and LH timing chain tensioners.
    - Install new tensioners, as necessary.

22. ***NOTICE:*** **Timing chain procedures must be followed exactly or damage to valves and pistons will result.**

    Compress the tensioner plunger, using a vise.

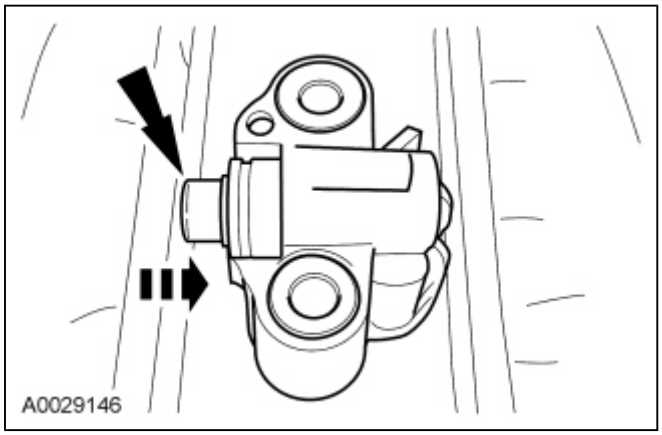

23. Install a retaining clip on the tensioner to hold the plunger in during installation.

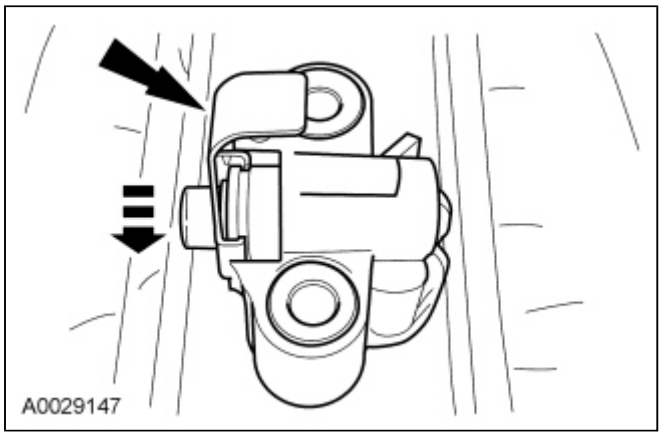

24. Remove the tensioner from the vise.

25. If the colored links are not visible, mark one link on one end and one link on the other end and use as timing marks.

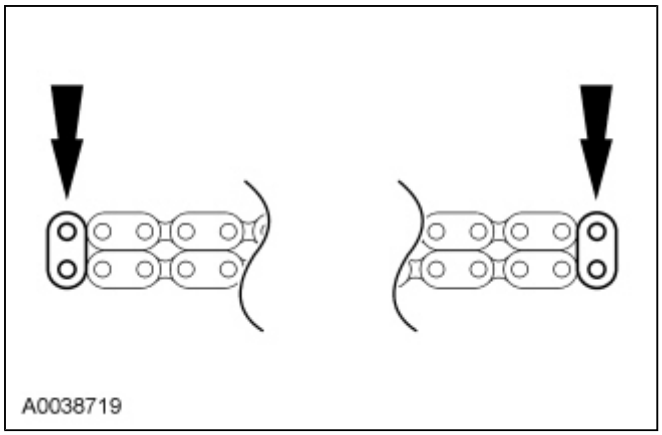

26. Install the 4 bolts and the LH and RH timing chain guides.
    - Tighten to 10 Nm (89 lb-in).

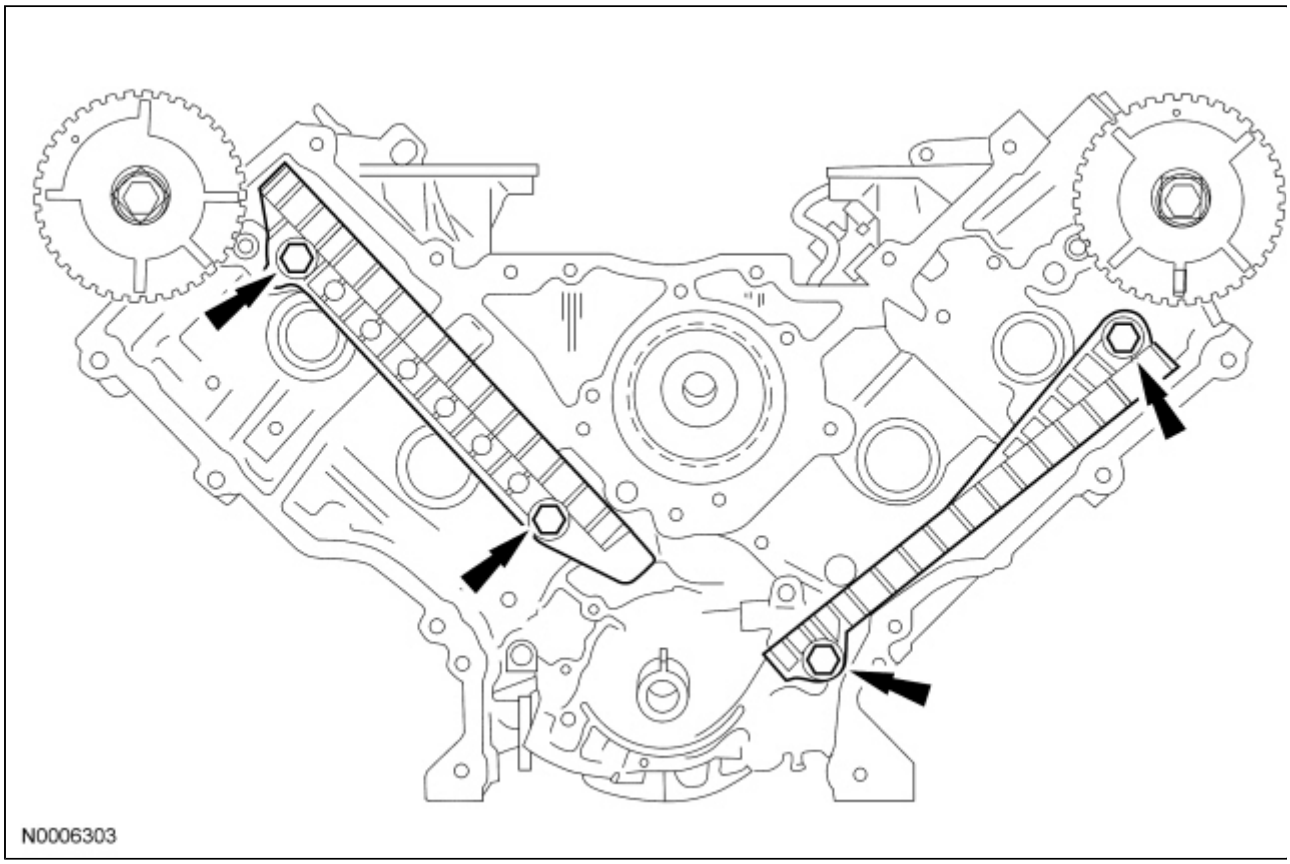

27. Position the lower end of the LH (inner) timing chain on the crankshaft sprocket, aligning the timing mark on the outer flange of the crankshaft sprocket with the single colored (marked) link on the chain.

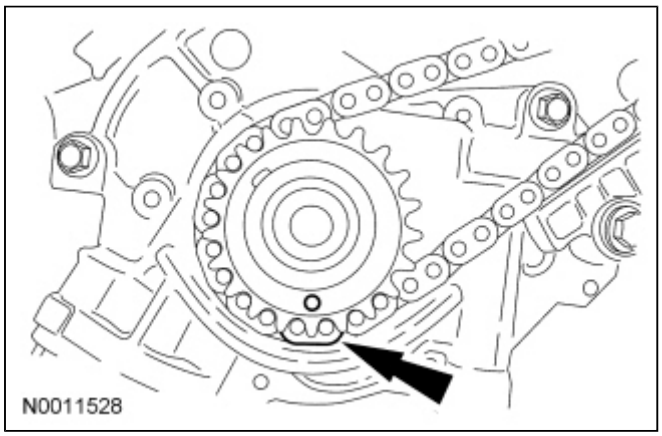

28. **NOTE:** Make sure the upper half of the timing chain is below the tensioner arm dowel.

    Position the LH timing chain on the camshaft sprocket. Make sure the camshaft sprocket timing mark is aligned with the colored (marked) chain link.

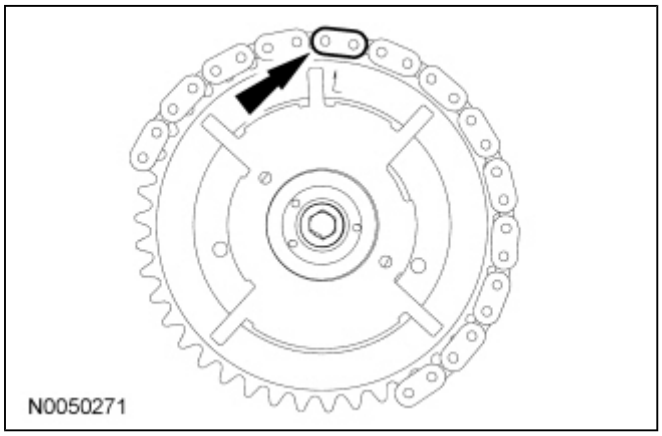

29. **NOTE:** The LH timing chain tensioner arm has a bump near the dowel hole for identification.

    Position the LH timing chain tensioner arm on the dowel pin and install the LH timing chain tensioner and 2 bolts.
    - Tighten to 25 Nm (18 lb-ft).

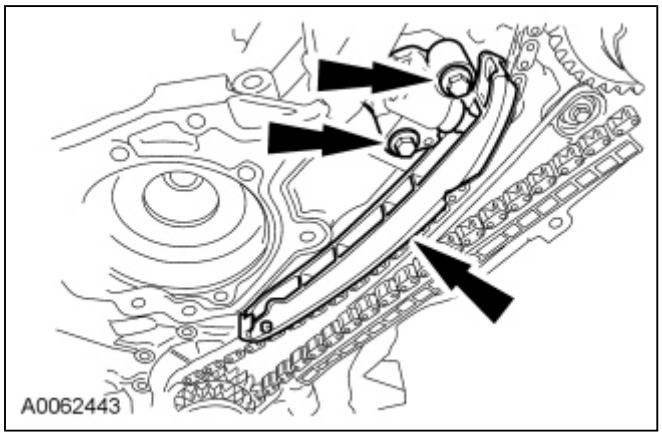

30. Remove the retaining clip from the LH timing chain tensioner.

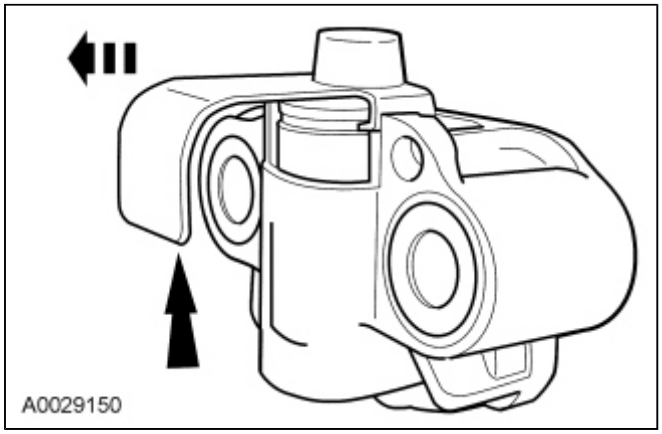

31. Position the lower end of the RH (outer) timing chain on the crankshaft sprocket, aligning the timing mark on the sprocket with the single colored (marked) chain link.

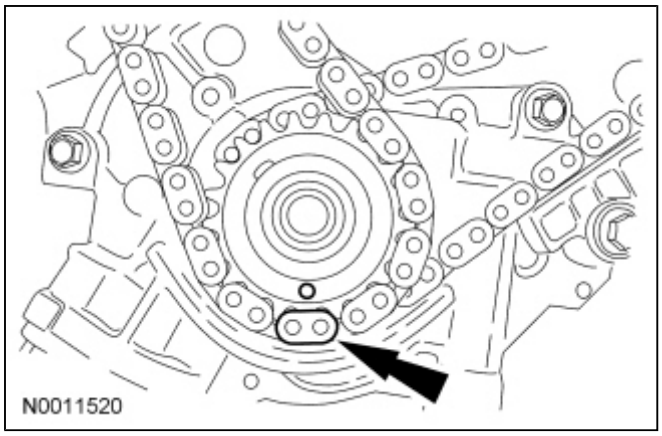

32. **NOTE:** The camshaft phaser and sprocket will be stamped with one of the illustrated timing marks for the RH camshaft.

    NOTE: The lower half of the timing chain must be positioned above the tensioner arm dowel.

    Position the RH timing chain on the camshaft sprocket. Make sure the camshaft sprocket timing mark is aligned with the colored (marked) chain link.

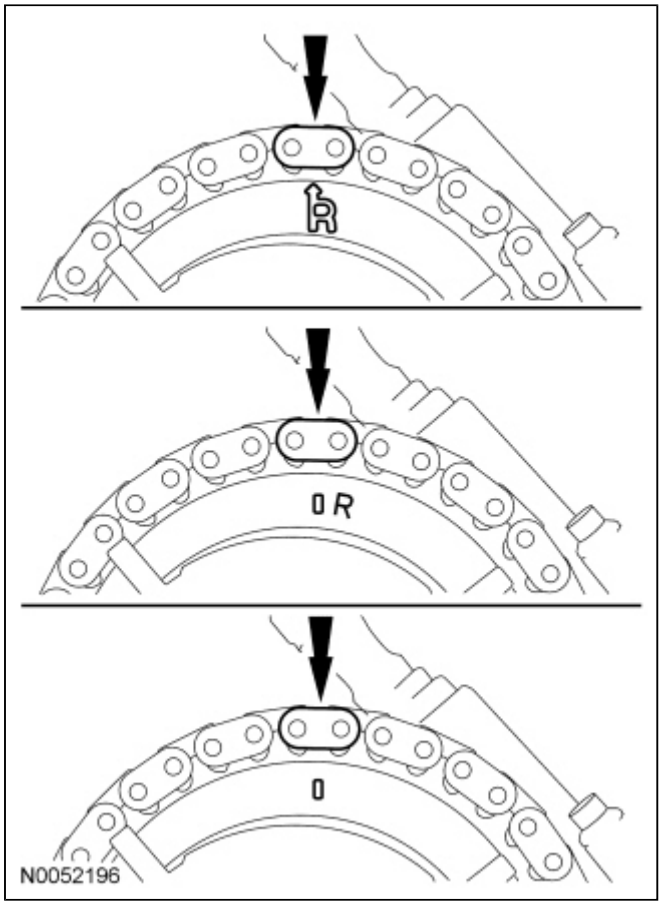

33. Position the RH timing chain tensioner arm on the dowel pin and install the RH timing chain tensioner and 2 bolts.
    - Tighten to 25 Nm (18 lb-ft).

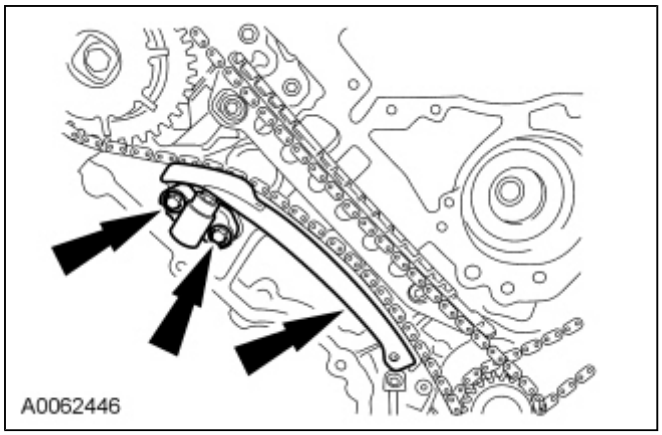

34. Remove the retaining clip from the RH timing chain tensioner.

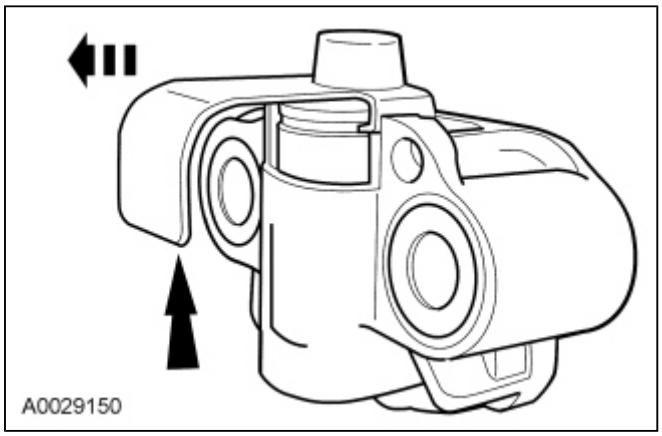

35. **NOTE:** The RH and LH camshaft phaser sprockets are similar. Refer to the single timing mark to identify the RH camshaft phaser sprocket and the L timing mark to identify the LH camshaft phaser sprocket.

    As a post-check, verify correct alignment of all timing marks. Make sure the timing marks on the sprockets correspond to the above note.

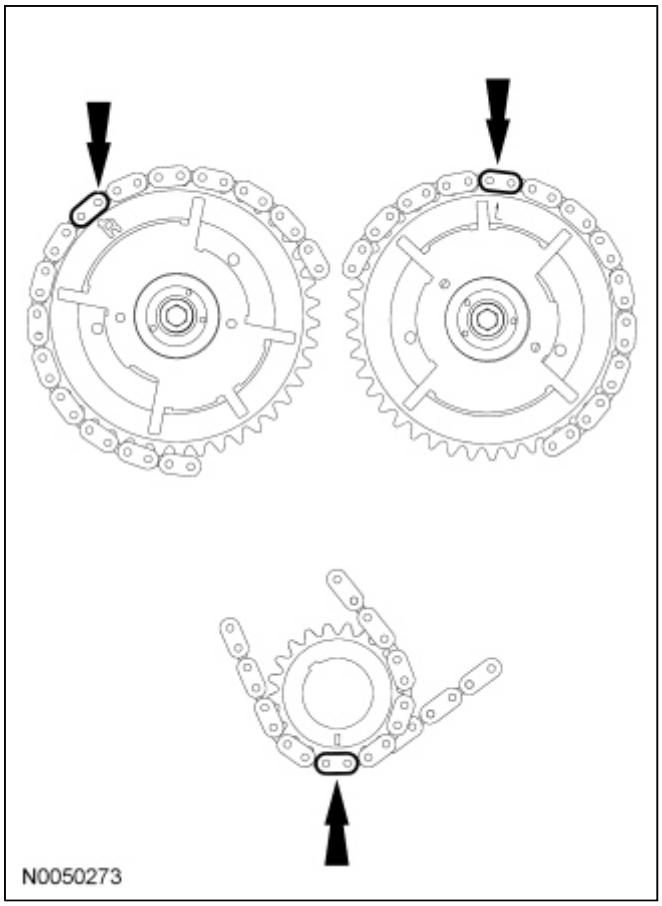

36. Install the crankshaft sensor ring on the crankshaft.

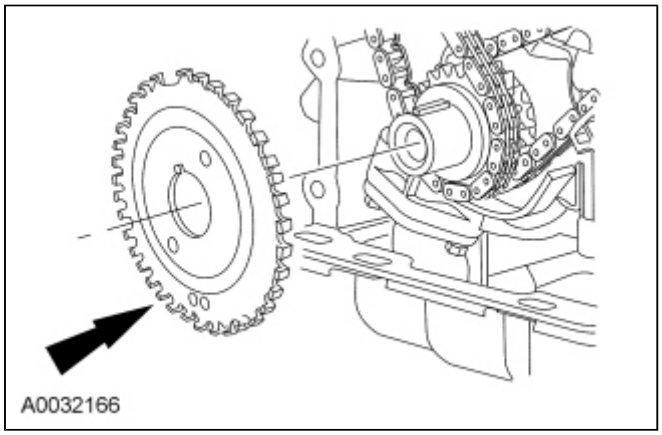

37. **NOTE:** Lubricate the roller followers with clean engine oil prior to installation.

    Using the Valve Spring Compressor, install all of the camshaft roller followers.

38. ***NOTICE:*** **Do not use metal scrapers, wire brushes, power abrasive discs or other abrasive means to clean the sealing surfaces. These tools cause scratches and gouges which make leak paths. Use a plastic scraping tool to remove all traces of old sealant.**

    NOTE: If the engine front cover is not secured within 4 minutes, the sealant must be removed and the sealing area cleaned. To clean the sealing area, use silicone gasket remover and metal surface prep. Follow the directions on the packaging. Failure to follow this procedure can cause future oil leakage.

    NOTE: Make sure that the engine front cover gasket is in place on the engine front cover before installation.

    Apply a bead of silicone gasket and sealant along the cylinder head-to-cylinder block surface at the locations shown.

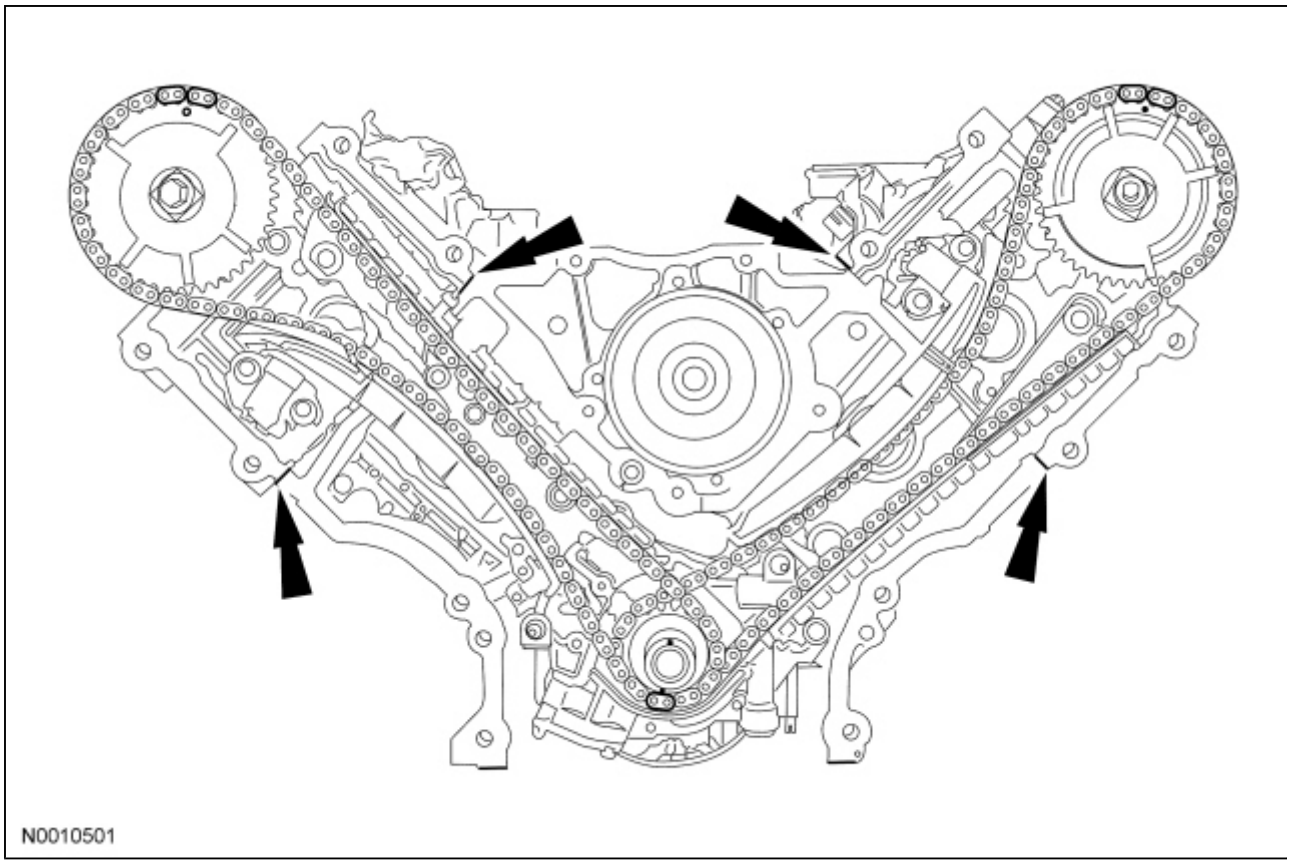

39. Install a new engine front cover gasket on the engine front cover. Position the engine front cover onto the dowels. Install the 15 fasteners finger-tight.

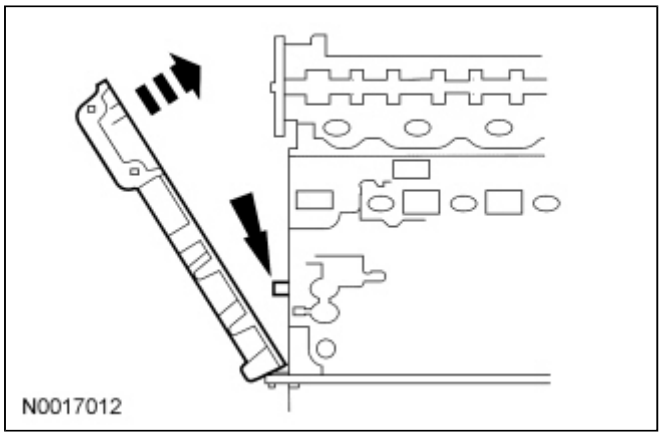

40. Tighten the 15 engine front cover fasteners in the sequence shown to 25 Nm (18 lb-ft).

Item	Part Number	Description
1	N806177	Bolt, Hex Flange Head Pilot, M8 x 1.25 x 53
2	N806177	Bolt, Hex Flange Head Pilot, M8 x 1.25 x 53
3	N806177	Bolt, Hex Flange Head Pilot, M8 x 1.25 x 53
4	N806177	Bolt, Hex Flange Head Pilot, M8 x 1.25 x 53
5	N806177	Bolt, Hex Flange Head Pilot, M8 x 1.25 x 53
6	W706508	Stud, Hex Shoulder Pilot, M8 x 1.25 x 50 - M6 x 1 x 10
7	N808586	Stud and Washer, Hex Head Pilot, M8 x 1.25 - M6 x 1 x 86.35
8	N806177	Bolt, Hex Flange Head Pilot, M8 x 1.25 x 53
9	N806177	Bolt, Hex Flange Head Pilot, M8 x 1.25 x 53
10	N806177	Bolt, Hex Flange Head Pilot, M8 x 1.25 x 53

11	N806177	Bolt, Hex Flange Head Pilot, M8 x 1.25 x 53
12	N806300	Stud, Hex Shoulder Pilot, M8 x 1.25 x 1.25 x 91.1
13	N806300	Stud, Hex Shoulder Pilot, M8 x 1.25 x 1.25 x 91.1
14	N806300	Stud, Hex Shoulder Pilot, M8 x 1.25 x 1.25 x 91.1
15	N806300	Stud, Hex Shoulder Pilot, M8 x 1.25 x 1.25 x 91.1

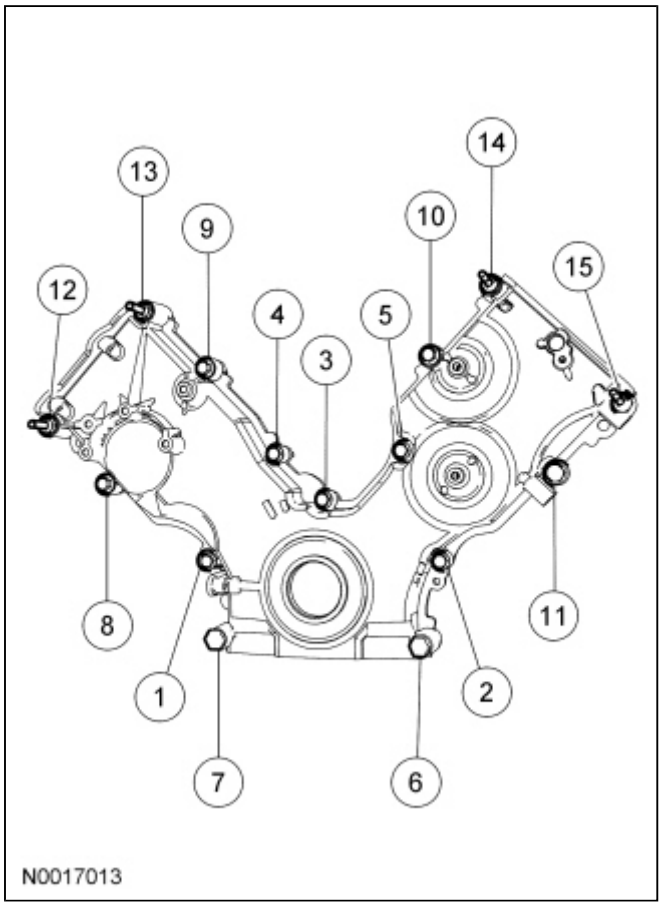

41. Loosely install the 4 bolts, then tighten the bolts in 2 stages, in the sequence shown.
    - Stage 1: Tighten to 20 Nm (177 lb-in).
    - Stage 2: Tighten an additional 60 degrees.

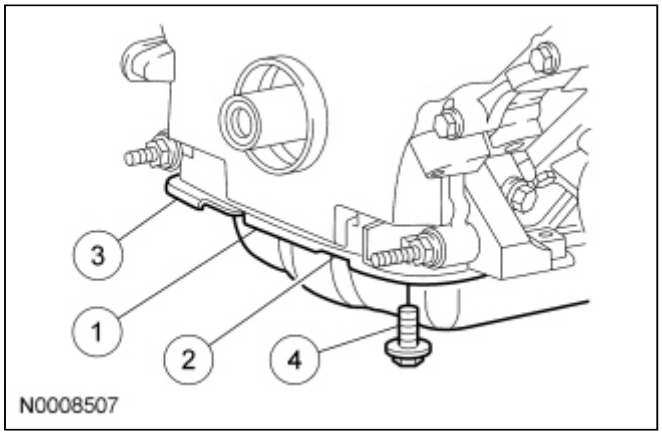

42. Lubricate the engine front cover and the crankshaft seal inner lip with clean engine oil.

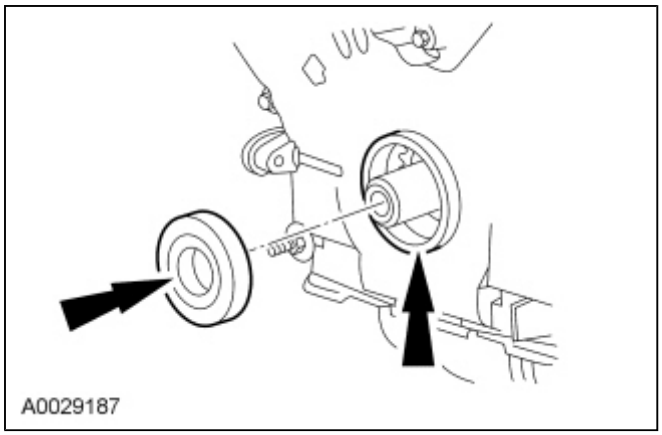

43. Using the Crankshaft Vibration Damper Installer, Crankshaft Front Oil Seal Installer and Front Cover Oil Seal Installer, install the crankshaft front oil seal into the engine front cover.

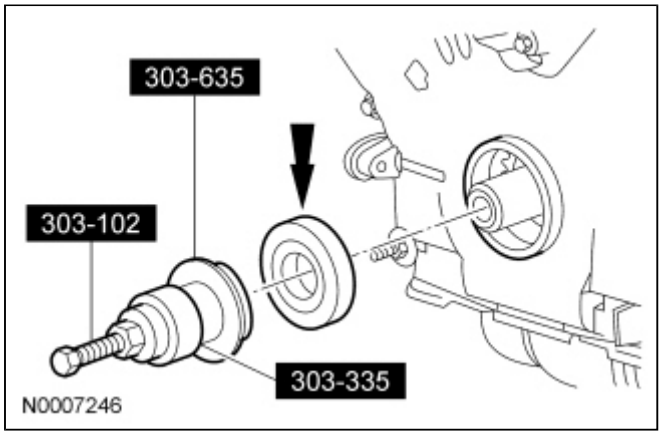

44. **NOTE:** If not secured within 4 minutes, the sealant must be removed and the sealing area cleaned with silicone gasket remover and metal surface prep. Allow to dry until there is no sign of wetness, or 4 minutes, whichever is longer. Failure to follow this procedure can cause future oil leakage.

    Apply silicone gasket and sealant to the Woodruff key slot in the crankshaft pulley.

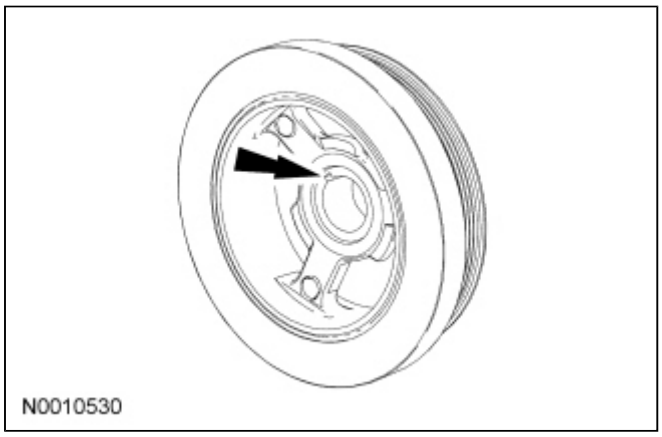

45. Using the Crankshaft Vibration Damper Installer, install the crankshaft pulley.

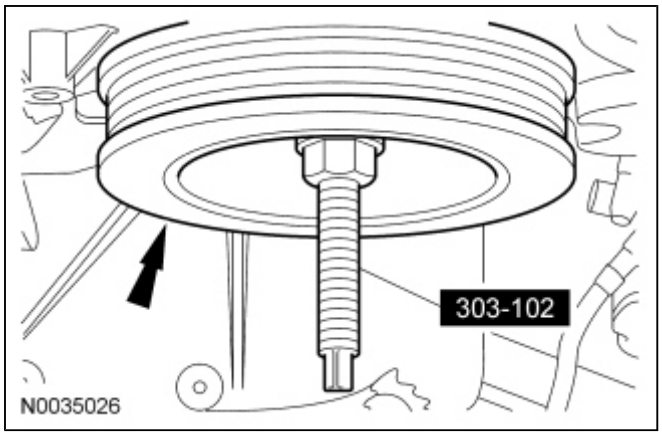

46. Using a new crankshaft pulley bolt, install the bolt and washer and tighten the bolt in 4 stages.
    - Stage 1: Tighten to 90 Nm (66 lb-ft).
    - Stage 2: Loosen 360 degrees.
    - Stage 3: Tighten to 50 Nm (37 lb-ft).
    - Stage 4: Tighten an additional 90 degrees.

47. Install the RH side accessory drive belt idler pulley, the coolant pump pulley and the 5 bolts.
    - Tighten to 25 Nm (18 lb-ft).

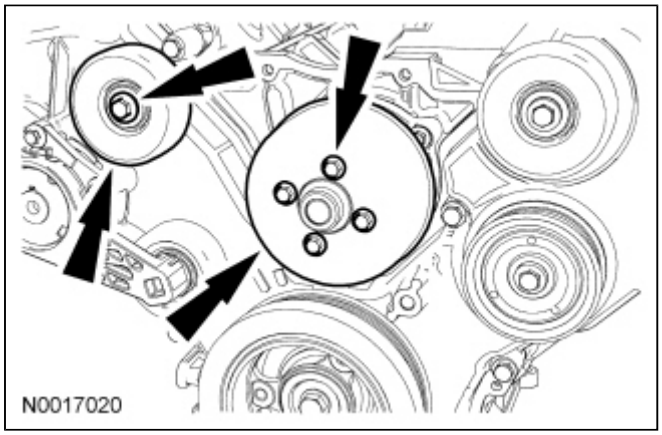

48. Install the Crankshaft Position (CKP) sensor and the bolt.
    - Tighten to 10 Nm (89 lb-in).

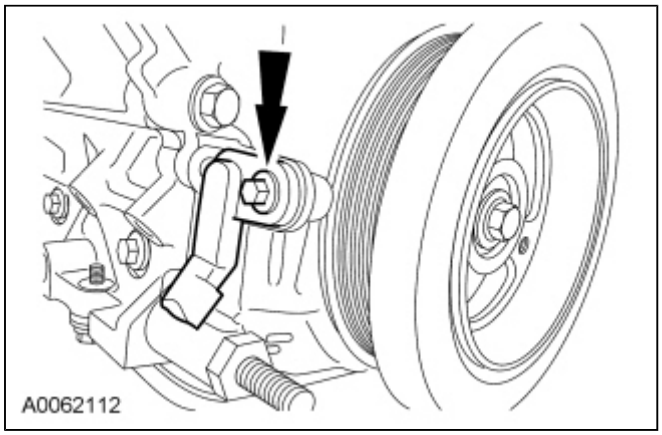

49. **NOTE:** Lubricate the new O-ring seal with clean engine oil prior to installation.

    Install the LH Camshaft Position (CMP) sensor and the bolt.
    - Tighten to 10 Nm (89 lb-in).

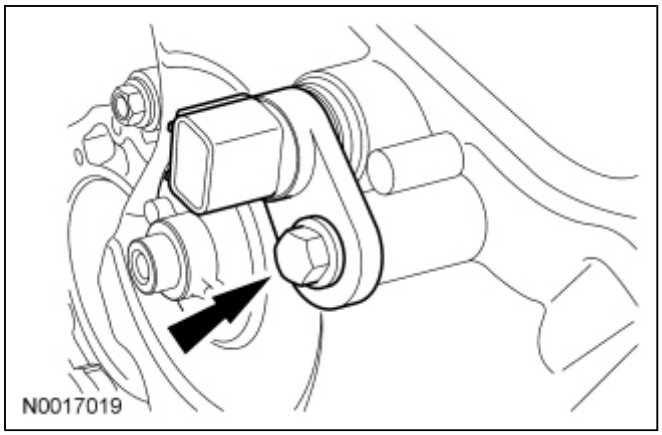

50. **NOTE:** Lubricate the new O-ring seal with clean engine oil prior to installation.

    Install the RH CMP sensor and the bolt.
    - Tighten to 10 Nm (89 lb-in).

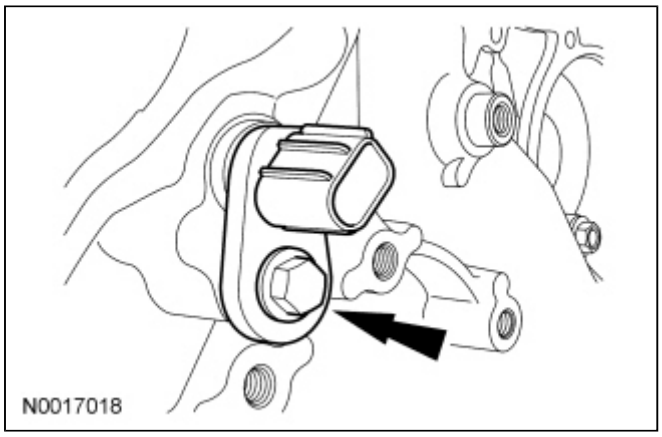

51. ***NOTICE:*** **Do not use metal scrapers, wire brushes, power abrasive discs or other abrasive means to clean sealing surfaces. These tools cause scratches and gouges which make leak paths. Use a plastic scraping tool to remove all traces of old sealant.**

    Clean the valve cover mating surface with silicone gasket remover and metal surface prep. Follow the directions on the packaging.

52. **NOTE:** If not secured within 4 minutes, the sealant must be removed and the sealing area cleaned. To clean the sealing area, use silicone gasket remover and metal surface prep. Follow the directions on the packaging. Failure to follow this procedure can cause future oil leakage.

    Apply silicone gasket and sealant in 2 places where the engine front cover meets the cylinder head.

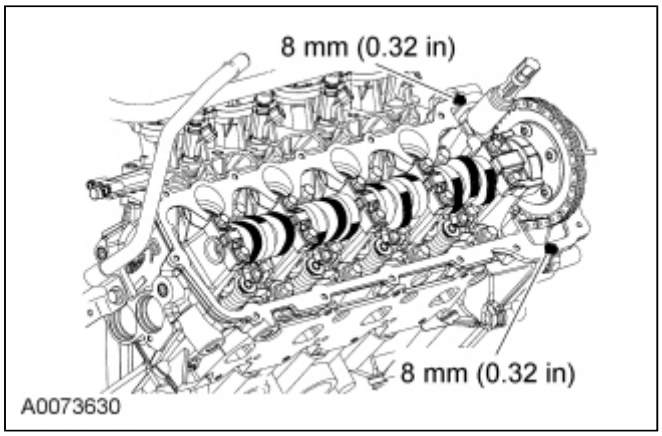

53. ***NOTICE:*** **When installing the valve cover, make sure to avoid damaging the Variable Camshaft**

Timing (VCT) solenoid.

Position the RH valve cover and gasket on the cylinder head and tighten the bolts in the sequence shown.

- Tighten to 10 Nm (89 lb-in).

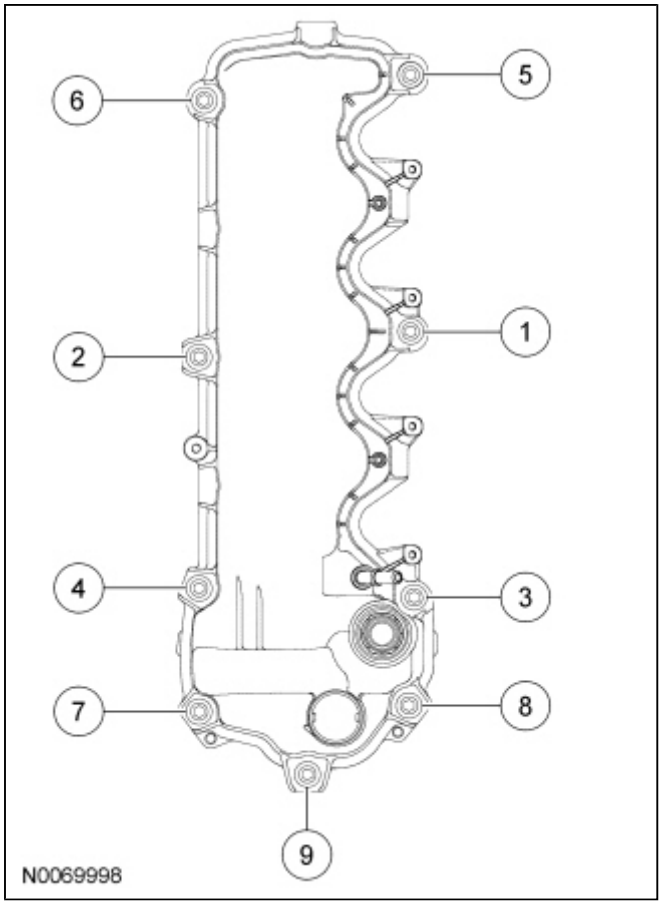

54. ***NOTICE:*** **Do not use metal scrapers, wire brushes, power abrasive discs or other abrasive means to clean sealing surfaces. These tools cause scratches and gouges which make leak paths. Use a plastic scraping tool to remove all traces of old sealant.**

    Clean the valve cover mating surface with silicone gasket remover and metal surface prep. Follow the directions on the packaging.

55. **NOTE:** If not secured within 4 minutes, the sealant must be removed and the sealing area cleaned. To clean the sealing area, use silicone gasket remover and metal surface prep. Follow the directions on the packaging. Failure to follow this procedure can cause future oil leakage.

    Apply silicone gasket and sealant in 2 places where the engine front cover meets the cylinder head.

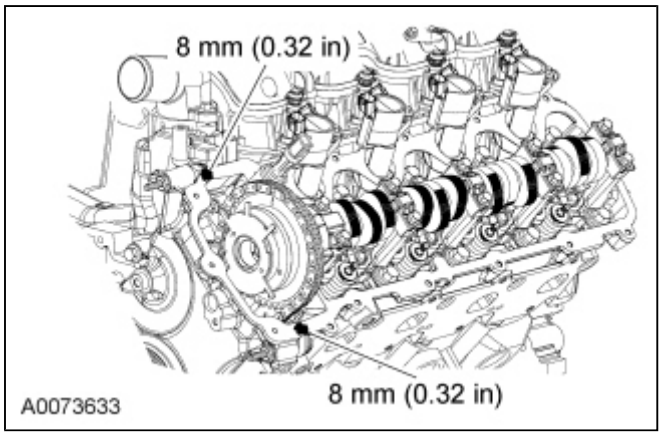

56. ***NOTICE:*** **When installing the valve cover, make sure to avoid damaging the Variable Camshaft**

Timing (VCT) solenoid.

Position the LH valve cover and gasket on the cylinder head and tighten the bolts in the sequence shown.
- Tighten to 10 Nm (89 lb-in).

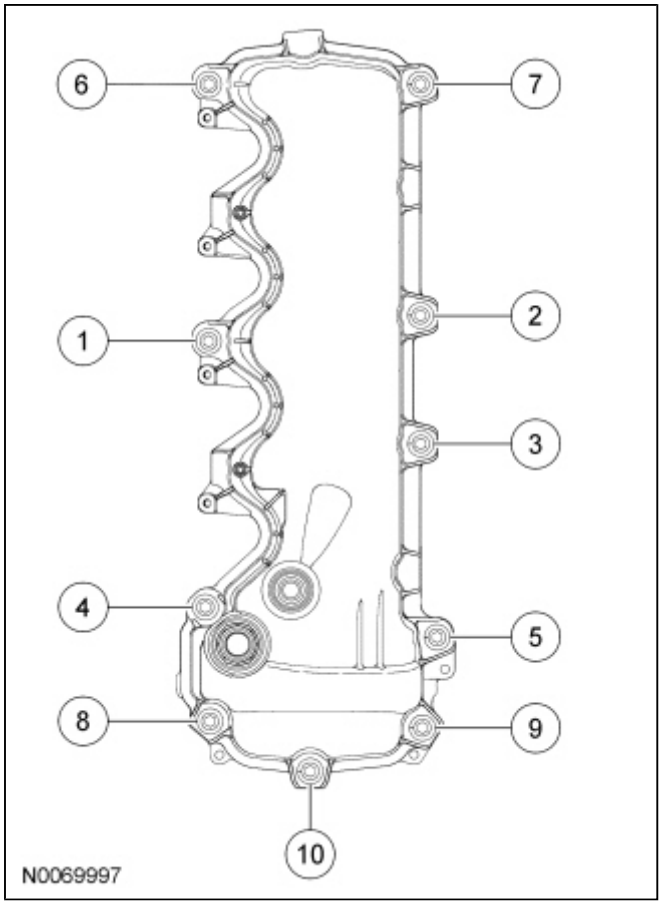

57. Install the oil level indicator tube and the bolt.
    - Install a new O-ring seal and lubricate the O-ring seal with clean engine oil prior to installation.
    - Tighten to 10 Nm (89 lb-in).

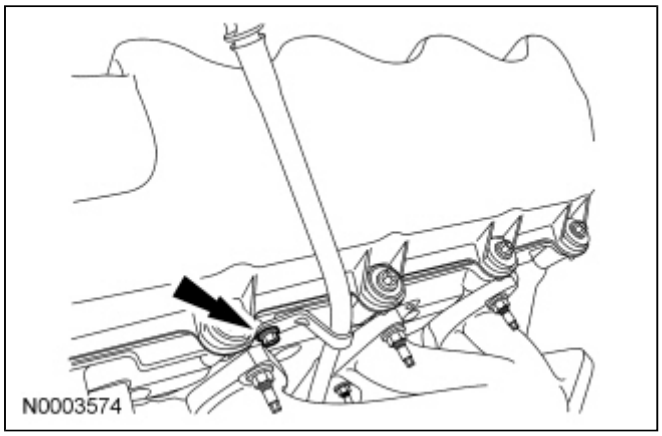

58. Install a new oil filter.

59. **NOTE:** LH shown, RH similar.

    Install the 8 ignition coils and the 8 bolts.
    - Tighten to 6 Nm (53 lb-in).

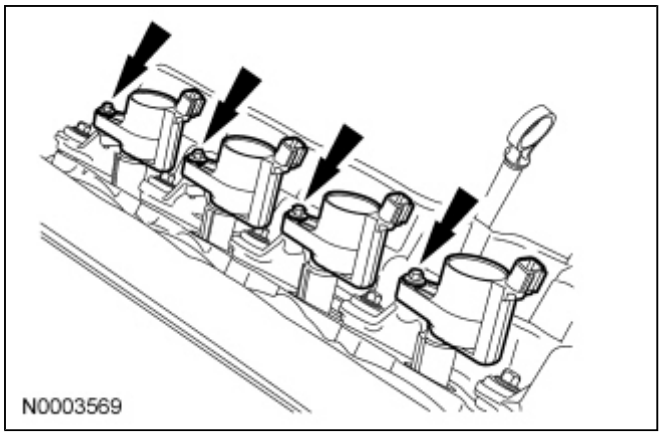

60. Position the engine wiring harness on the engine.

61. Connect the Engine Oil Pressure (EOP) switch electrical connector.

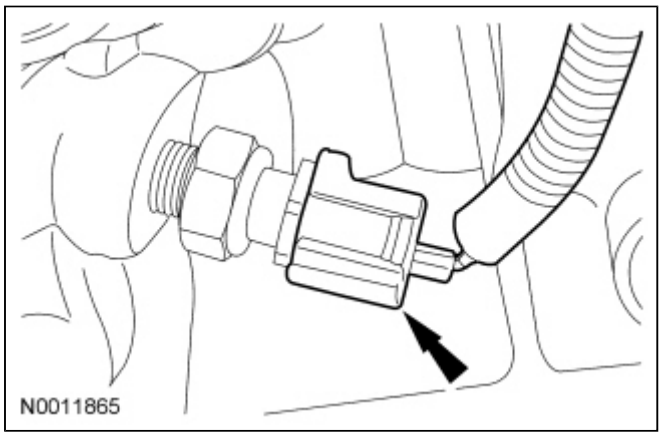

62. Attach the engine wiring harness retainer to the stud bolt.
    - Connect the LH Heated Oxygen Sensor (HO2S) electrical connector.

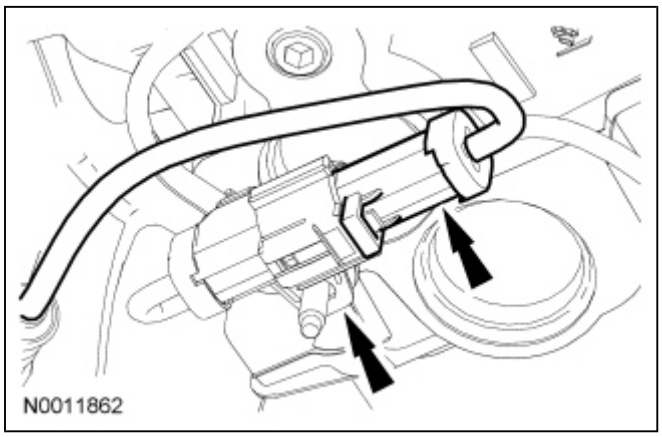

63. Connect the Knock Sensor (KS) electrical connector and pin-type retainer.

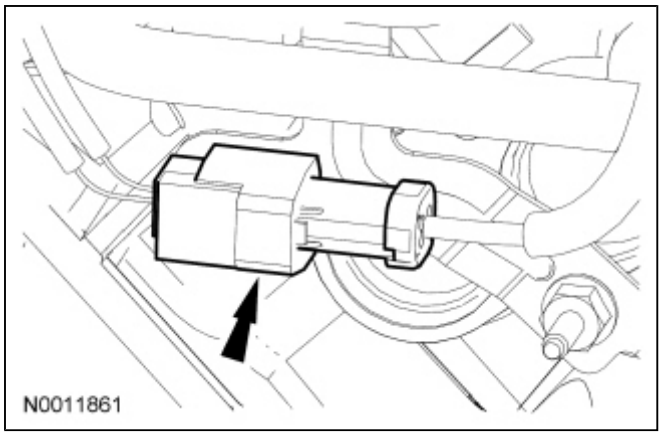

64. Attach the Cylinder Head Temperature (CHT) sensor jumper harness electrical connector pin-type retainer.

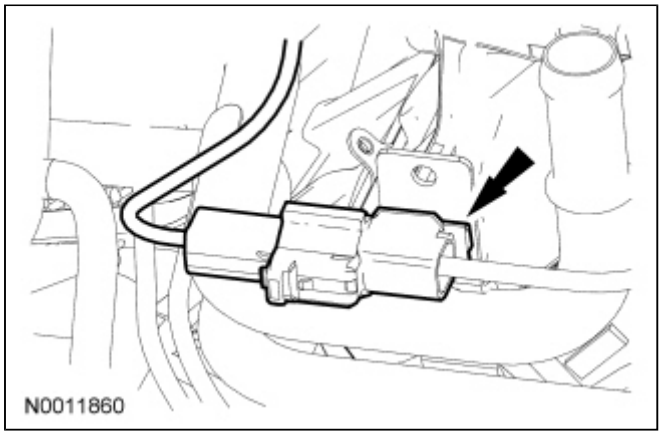

65. Connect the CHT sensor electrical connector.

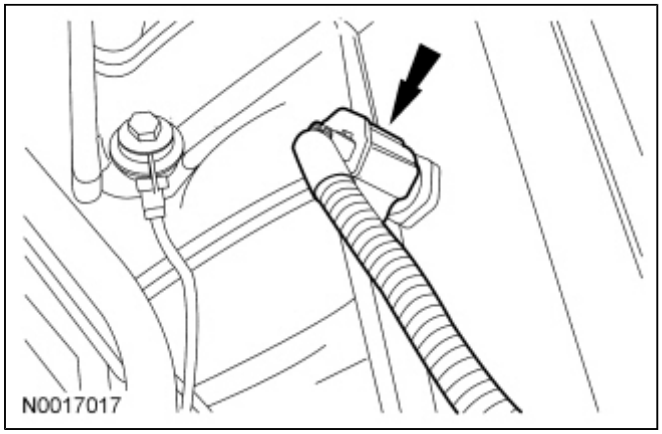

66. Attach the engine wiring harness pin-type retainers.

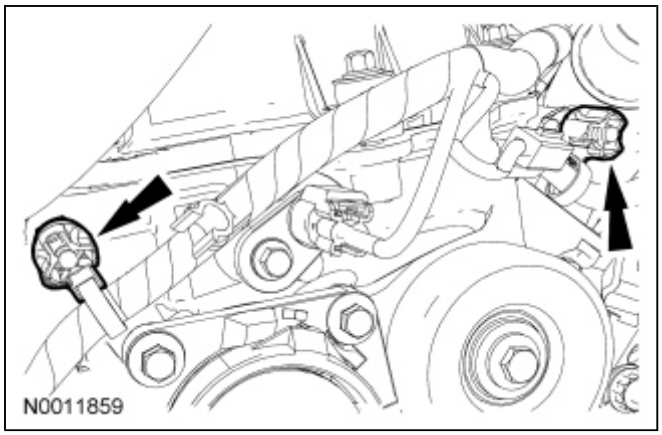

67. Connect the 2 engine wiring harness retainers to the LH valve cover studs.

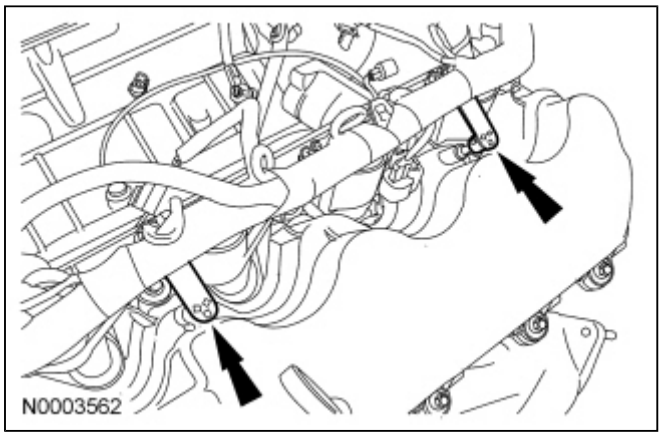

68. Connect the 3 engine wiring harness retainers to the RH valve cover studs.

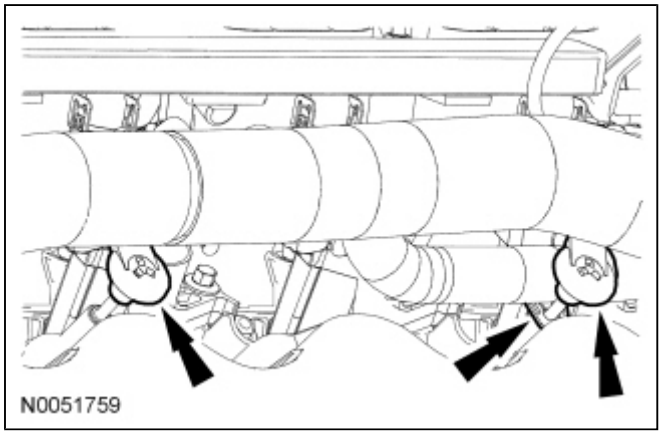

69. **NOTE:** RH shown, LH similar.

    Connect the 4 RH and 4 LH ignition coil electrical connectors.

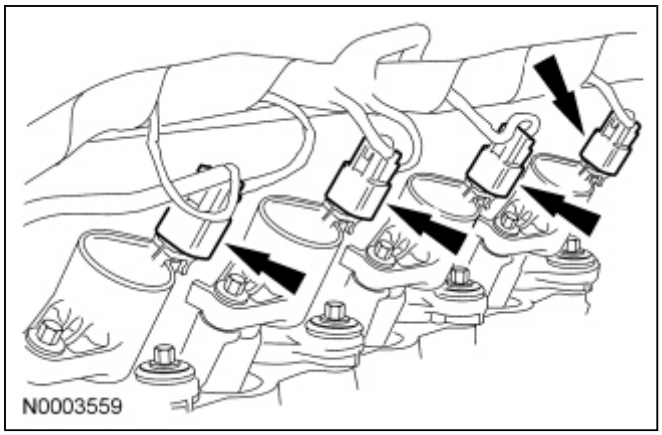

70. Connect the PCV tubes to the RH and LH valve covers.

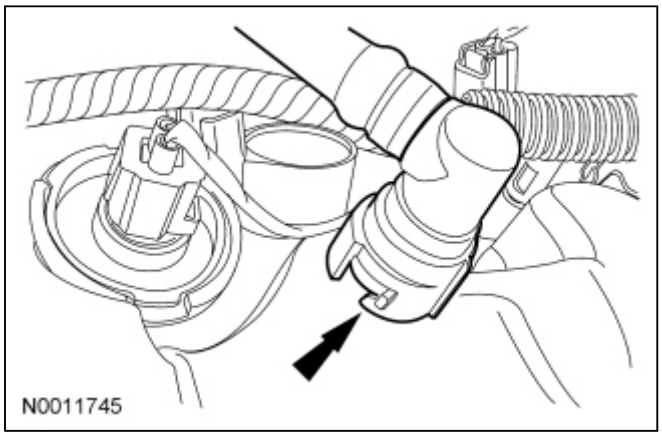

71. Install the RH radio ignition interference capacitor and nut.
    - Tighten to 10 Nm (89 lb-in).

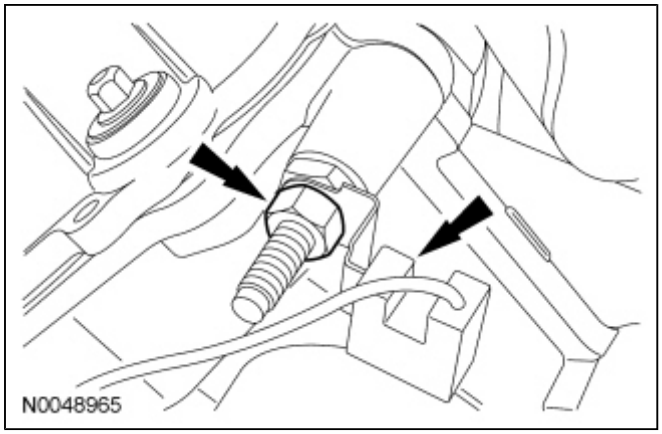

72. Attach the engine wiring harness pin-type retainers.

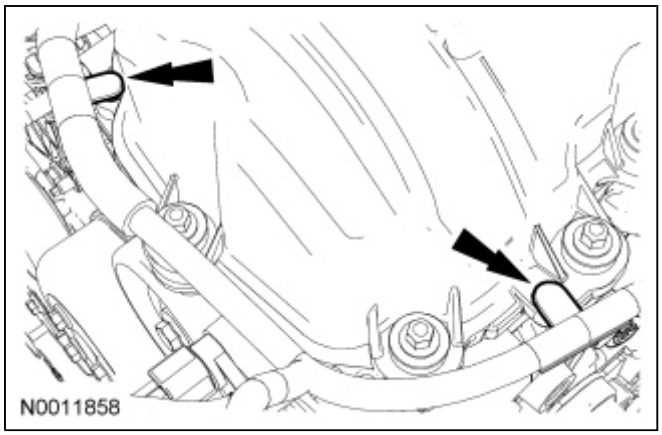

73. **NOTE:** RH shown, LH similar.

    Connect the RH and LH Variable Camshaft Timing (VCT) solenoid electrical connectors.

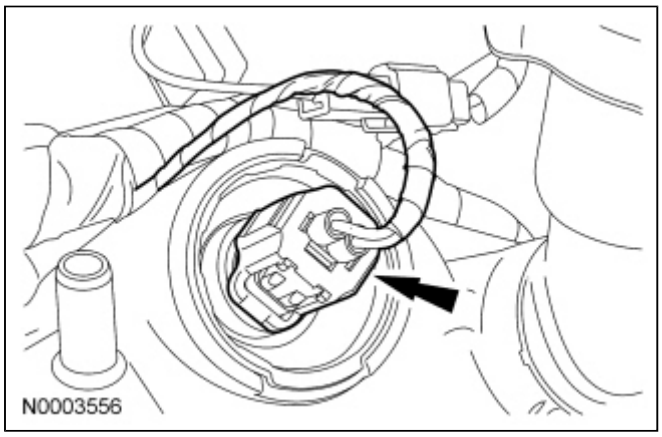

74. **NOTE:** RH shown, LH similar.

    Connect the RH and LH CMP sensor electrical connectors.

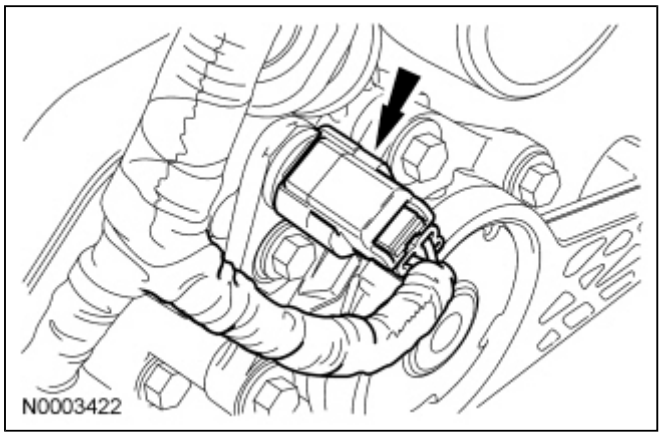

75. Install the Engine Lifting Bracket.

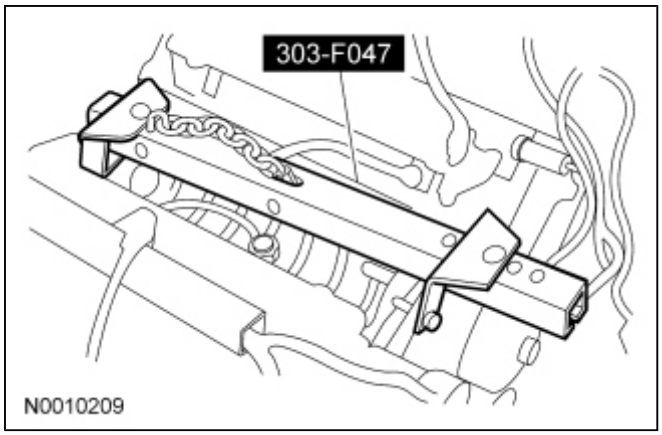

76. Using a suitable floor crane, remove the engine from the engine stand.

77. Install the engine. For additional information, refer to Engine in this section